Product Description

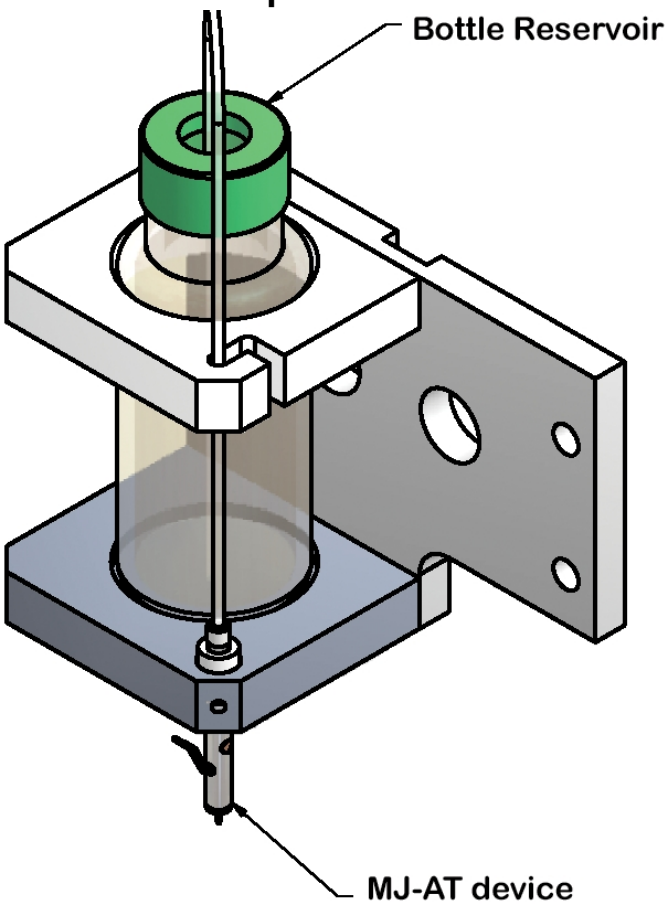

The PH-47 is a drop-on-demand printhead that operates at room temperature. It has a glass reservoir, PTFE tubing, and PEEK fittings to interconnect with the dispensing device. Fluid can be added to the reservoir without removing the printhead assembly, and unused fluid can be recovered, or stored in the glass reservoir. An optional stirring module is available, for use with suspensions, such as nano-metals, that may settle.

A broad range of materials can be dispensed using the PH-47, including bioactive, optically active, sensor, and other materials. Drop volumes ranging from 5 pL to as high as 0.5 nL have been dispensed

Standard Features

All parts cleanable / reusable; Large 25 mL capacity removable glass reservoir that can be used for off-line fluid storage / refrigeration; Unused fluid recoverable; 1 mL minimum load volume; Compatible with Jetlab® II, and Jetlab® 4 family.

Avalabie Options

MJ-AT devices available in orifice diameters 10-80µm; solid-state magnetic stirring module.

Ordering Information

PH-47

Unheated, large reservoir Printhead Assembly for low-temperature dispensing devices.

MJ-AT-01-xxx
Low-temperature dispensing device with MINSTAC threaded fluid fitting, xxx denotes orifice diameter in microns.

STIR-47
Inductive drive magnetic stirrer, 130-1,000 rpm.

Support Equipment

The PH-47 may be combined with a fluid reservoir and the following components and subsystems to create a functional subsystem.

CT-M3-02
JetDrive™ III controller, including command set and Windows based stand-alone control program, JetServer™. Includes built in strobe delay & level 02 firmware (complex waveforms).

CT-PT-21
Pressure / Thermal Controller with one manual pneumatic channel.

CT-PT-A1
Electronic Pressure Controller and Pressure Mode Selector, single channel.

CM-VS-03
Basic Optics System: CCD camera, power supply, lens, fine focus, mounting block.

Additional Information

Brochure (PDF)
Drawings with dimensions
Equipment Selection Guide
Integration Guide
Cleaning Guide