Electrical

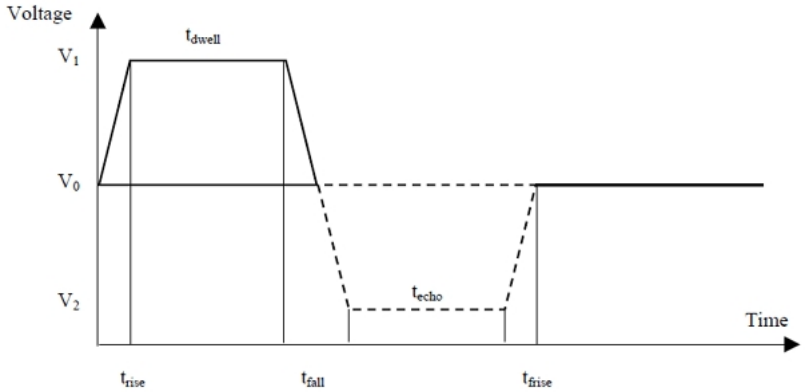

In order to generate drops, a voltage pulse is applied to the MJ device electrical connector. A typical shape is shown in the figure. MicroFab's JetDrive™ III can supply this type of waveform with a wide range of waveform parameters to address a wide range of applications / materials. Other drive units may be employed if they can supply an approximately 1 nF load with voltages and timing appropriate for the working fluid and application.

The polarity of the voltage determines the sequence of expansion and contraction of the piezoelectric element. When using a JetDrive™ III the keyed connectors ensure the correct polarity. When using other drive electronics, the signal shown in the figure should be applied to the dispenser red wire with the blue wire connected to ground.

See Technote 99-03 on MicroFab's web page for more information on the effects of the waveform parameters on the generated drops.

Mechanical

High temperature dispensing devices are only sold with the associated printhead and mounting fixtures. Drawings are provided for the hole pattern to interface with the user's set-up.

The low temperature devices in the MJ family (-AB, -AT, -ABP, -ATP, -ABL and -AL) can be mounted into MicroFab's printhead assemblies. Alternately, they can be mounted into customer designed fixtures. All low temperature devices are usually held by the cylindrical section in a small clearance hole using a nylon set screw to prevent deformation. If -AL devices are connected directly to a syringe (their fluidic connection is a luer fiting) it is recommended to hold the syringe barrel and not the dispenser to prevent damage due to the leverage introduced by the syringe.

A feed through for the wires must be a part of the mounting fixture. The wires come out at the center of the cylindrical section of each device type. The -ATP device holding fixtures can also take advantage of the conical reference surfaces that are part of the tip protector to provide vertical and angular alignment. Finally, the -AT and -ATP can be mounted by holding the male MINSTAC union.

The Low-Temperature MJ Dispensing Device Integration Guide (PDF) shows the

dimensions (inches) of some of the tdispensers.

Fluidic Interconnects, Filters, and Reservoirs

Note: The fluid to be dispensed must be purged from the reservoir through the tubing and to the orifice of the device. The MicroJet device is not self-priming and will not “pump” or move the fluid to the orifice.

Threaded Fitting (MINSTAC) MicroJet™ Devices; MJ-AT and MJ-ATP

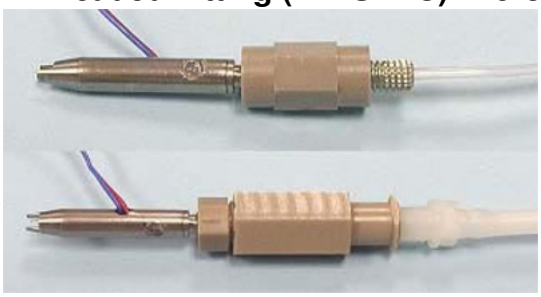

The MINSTAC fitted MicroJet devices have a male threaded end fitting that can be attached to tubing and fittings available from The Lee Company (www.theleeco.com).

A 062 MINSTAC Tubing Union (Part # TMUA3201950Z) can be used to interface the MINSTAC fitting on the MicroJet device with a MINSTAC Male Coupling Screw attached to Teflon tubing, as shown in the top image. Stocked pre-assembled tube sets having MINSTAC Male Coupling Screw on both ends of Teflon tubing (0.062” OD) are available (TUTC3216910L - 10 cm, TUTC3216915L - 15 cm, TUTC3216930L - 30 cm, TUTC3216960L - 60 cm).

The 062 MINSTAC Fitting End Kit (Part # TMZA3202010Z) can be used to attach the male fittings to Teflon tubing in order to obtain custom lengths. Additional Teflon tubing can be ordered from Lee (TUTA3216930D - 10 feet).

Another option is to interface the MINSTAC fitting on the MicroJet device using the 125/156 MINSTAC Female Tube - Luer Adapter (TMRA9502950Z) with the 125/156 MINSTAC to 062 MINSTAC Adapter (TMDA3203950Z) to connect to male Luer fittings, as shown in the bottom of the figure.

Barb Fitting MicroJet™ Devices MJ-AB

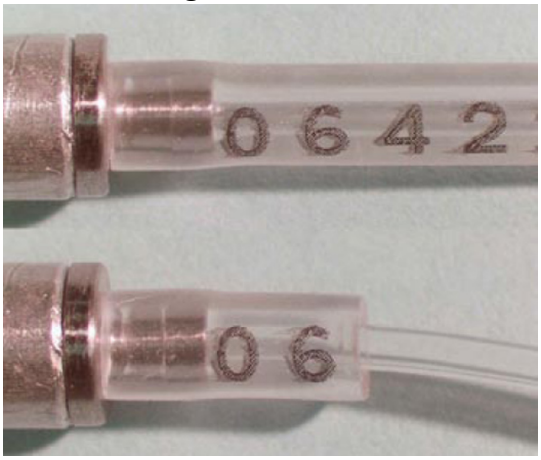

The barb fitting of MJ-AB MicroJet devices can be attached directly to C-Flex tubing, as

shown in the top device in the figure. Another option is to slip the PTFE microbore tubing, 0.022 x 0.042 in (0.55x1 mm) E-06417-21 (Cole Parmer) into a small section (6.0mm) of C-Flex tubing, 0.031 x 0.094 in (0.7x2.3 mm) E-06422-01 (Cole Parmer) that has been slipped over the barb fitting on the device, as shown in bottom device in the figure.

The C-Flex tubing or PTFE microbore tubing can then be connected to the syringe barrel adapter described below by inserting the metal needle end of a female luer fitted blunt needle into the C-Flex tubing (18 gauge needle part # 7018122) or PTFE microbore tubing (22 gauge needle part # 7018272) from Nordson EFD (www.nordson.com).

A similar approach can be taken for the MJ-ABL devices, with the only difference being the size of the tubing. The approach illustrated at the bottom of the figure allows the use of higher resistance materials. For that configuration, use TYGON® Ultra Chemical Resistant Tubing EW-95630-00 (Cole Parmer) and then the same PTFE tubing described above.

A syringe filter can be placed in-line between the female luer fitted blunt end needle connected to the tubing and the male luer fitted syringe body. The tubing should be flushed thoroughly with filtered fluid to remove particulate material prior to connecting to the device. Such an in-line filter should be rated to about 10% of the orifice diameter. In most instances a 5 micron pore size would be sufficient (see filter section below).

Reservoir Syringe Types

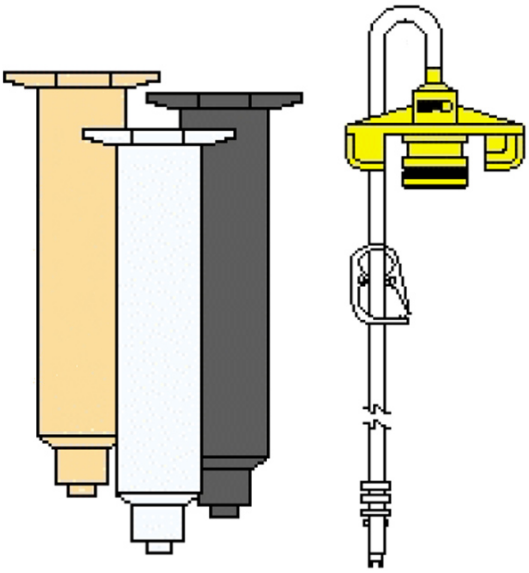

A syringe barrel adapter assembly available from Nordson EFD (www.nordson.com) (cat. # 7012341, 7012054, 7012339, 7012338) can be attached to a syringe barrel reservoir (cat. # 7012072, 7012094, 7012112, 7012134) to provide for a reservoir to the MicroJet device (see figure to the right). The syringe barrel reservoirs and adapter assembles are available in 3cc, 5cc, 10cc, 30cc and 55cc volumes. The syringe barrel reservoir and adapter assemblies can be attached to a MicroFab Pressure Control Unit or other house vacuum/pressure control. The fluid can then be purged from the reservoir through the MicroJet device. Back-pressure and vacuum can also be controlled to maintain the proper meniscus at the orifice of the MicroJet device. A proper meniscus can also be maintained without pressure regulators by adjusting the height of the reservoir relative to the orifice. [Note that it is the height of the top surface of the fluid in the

reservoir that determines the static pressure at the orifice.] An in-line filter (5.0 micron mesh) should be used to prevent clogging the orifice. Tubing should be flushed thoroughly with filtered fluid before connecting to the device.

Tubing Reservoirs

For small volumes a 6.5cm section of PTFE microbore tubing, 0.022 x 0.042 in (0.55x1 mm) E-06417-21 can be inserted into a small section (6.0mm) of C-Flex tubing, 0.031 x 0.094 in (0.7x2.3 mm) E-06422-01 that has been slipped over the barb fitting on a barb fitted MicroJet device (top of the figure). Another 6.0mm section of C-Flex tubing, 0.031 x 0.094 in (0.7x2.3 mm) E-06422-01 is slipped onto the distal end of the PTFE microbore tubing. The PTFE section of tubing will provide a reservoir including the dead volume within the MicroJet device. The length of the tubing determines the volume of the reservoir. A micropipette is used to load the tubing reservoir attached to the MicroJet device by inserting the pipette tip into the C-Flex tubing. Carefully remove the pipette tip while keeping the plunger in the pressed position after loading the tubing reservoir with fluid. Be sure to filter all fluids prior to use to prevent clogging the orifice.

Filters

Water-based fluids can be filtered using 5.0 micron pore size nylon syringe filters (Scientific Company F2500-50). Solvent-based fluids can be filtered using 5.0 micron pore size PTFE syringe filters (Millipore Millex-LS SLLS 025 NS). New syringe filters should be flushed prior to use to remove particles from manufacturing. Small volumes (50-500 microliters) can be filtered (0.22 microns) using microcentrifuge filters (Millipore Ultrafree-MC UFC30GV00).

Dispensing Environment

Particulate contamination can block the orifice of the MicroJet dispensing device and interfere with operation. Thus, having a clean operating environment is essential.

- Avoid handling dispensing fluids, tubing, and dispensing devices in areas susceptible to dust or static electricity that attracts dust. Static charges are more prevalent in conditions of low relative humidity (